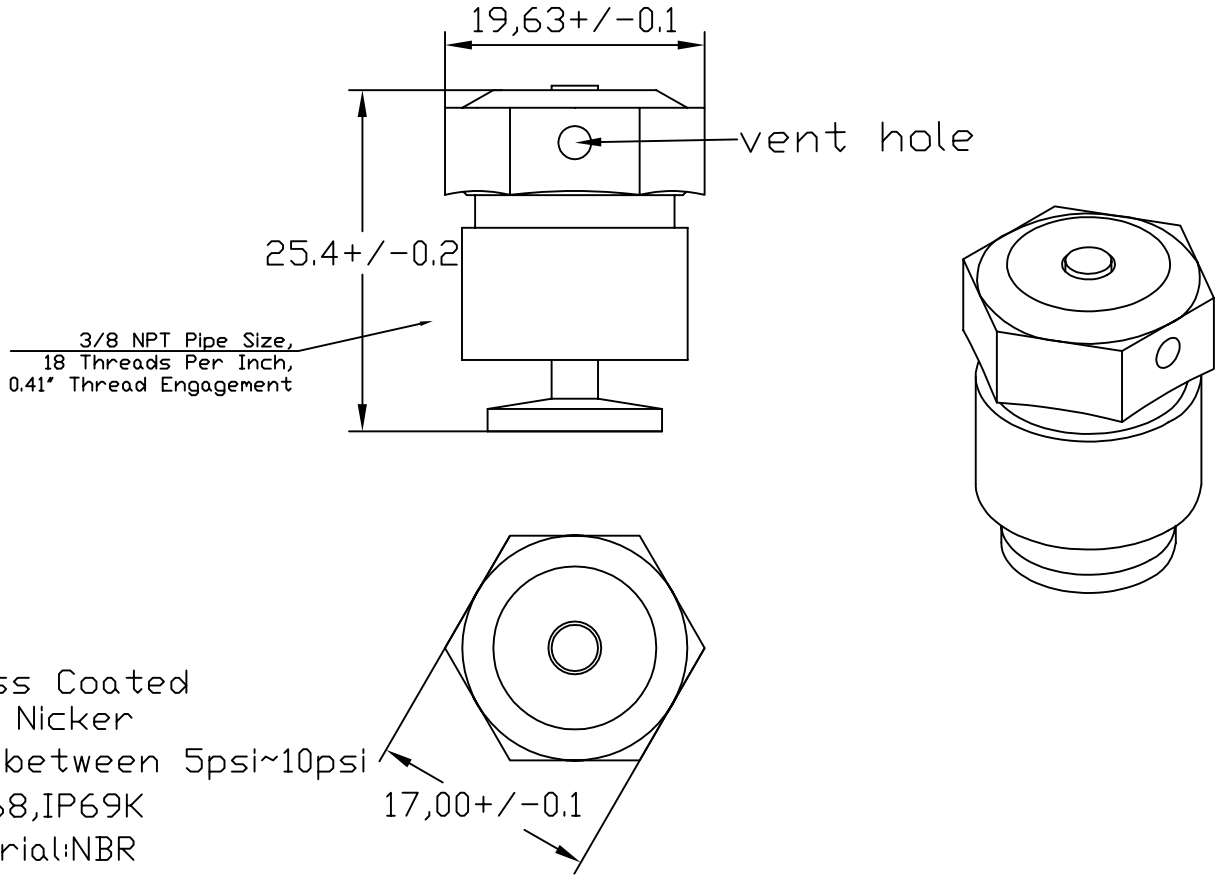

Note:

Material:Brass Coated
with Nicker

Open Valve between 5psi~10psi

IP rating:IP68,IP69K

O-RING Material:NBR

PARTS TO BE FREE OF BURR,OIL,
GREASE,CONTAMINATION AND MARKING

DIM Range	Metal/Plastic	Dimension Range	OTHERS
>0~15	± 0.13		
>15~50	± 0.15	>0~15	± 0.5
>50~100	± 0.25	>15~30	± 1
>100~200	± 0.4	>30~100	± 1.5
>200~400	± 0.6	>100	± 2
>400	± 1		

REV	Modification	people	date

Shenzhen Milvent Technology Co.,Ltd					Name	3/8NPT Breather Vavle
DRW/DATE	LI BEN 20221/02/11				P/N	MIV-3-8npt-MS-OW
Review/Date	Qu Yan 2022/02/11				Rev.	V:7
Check/Date	TAO LI 2022/02/11		Scale	5:1	Material	Brass with Nickel
Approval Date	Deng Kai2021/02/11		Weight	KG	DRW NO.	2022-003-01